NO. 80127

CAR RADIO SERVICE MANUAL

CUSTOM-MADE FOR TOYOTA CORONA

TOYOTA PART NO. 86120-20420 (TUNER ASS'Y, RADIO MODEL CR-6736AT)

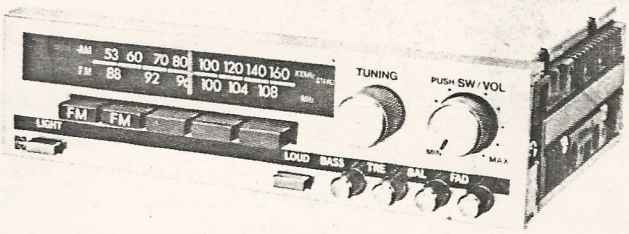

MODEL CR-6736AT

AM/FM/FM MPX 5-PUSHBUTTON CAR RADIO

SPECIFICATIONS*

Frequency Range:	AM	530 ~ 1605 kHz
	FM	88 ~ 108 MHz
Intermediate Frequency:	AM	450 kHz
	FM	10.7 MHz
Sensitivity:	AM	30 dB/μV (0.5 W output)
	FM	7 dB/μV for S/N 10 dB quieting
		13 dB/μV for S/N 30 dB quieting
Stereo Separation:	25 dB (at 1000 Hz)	
Power Output:	4 x 10 W (at 10% THD)	
Power Supply Voltage:	DC 12 V (11 ~ 16 V), negative ground	
Power Consumption:	Approx. 26.4 W	
	(2 A at 0.5 W output, DC 13.2 V)	
Speaker Impedance:	4 Ω	
Transistor:	5	
IC's:	11	
Diodes:	9	
Dimensions**:	Width;	7-3/32" (180 mm)
	Height;	2" (50 mm)
	Depth;	5-43/64" (144 mm)
Weight**:	2 lbs. (1.25 kg)	

FEATURES

- AM/FM/FM MPX, 5-pushbutton and manual tuning radio.
- Custom-made for TOYOTA CORONA.
- DC 12 V, negative ground.
- Sensitive and selective superheterodyne system with IC's and ceramic filters.
- I.N.Q. (Impulse Noise Quieting) circuit.
- A.T.C. (Automatic Tone Control).
- A.S.C. (Automatic Separation Control).
- Built-in loudness control.
- Light ON/OFF switch on dial plate.
- Separated bass and treble control.
- B.T.L. (Balance Transformer Less) circuit.
- Balance and fader control for 4-amplifier to 4-speaker system.
- Combination system with exclusive car stereo Model CX-6741AT.

* Specifications subject to change without notice.
** Weights and Dimensions shown are approximate.

TOYOTA MOTOR SALES CO., LTD.

CONTENTS

	Page
DIMENSIONS AND LOCATION OF CONTROLS	1
ANTENNA TRIMMER ALIGNMENT	1
FUSE REPLACEMENT	1
COMPOSITION	1
PARTS LOCATION	2
ALIGNMENT INSTRUCTIONS	3, 6
SCHEMATIC DIAGRAM	4
WIRING DIAGRAM	5
REPLACEMENT PARTS LIST	7, 9 ~ 16
EXPLODED VIEW	8

DIMENSIONS AND LOCATION OF CONTROLS

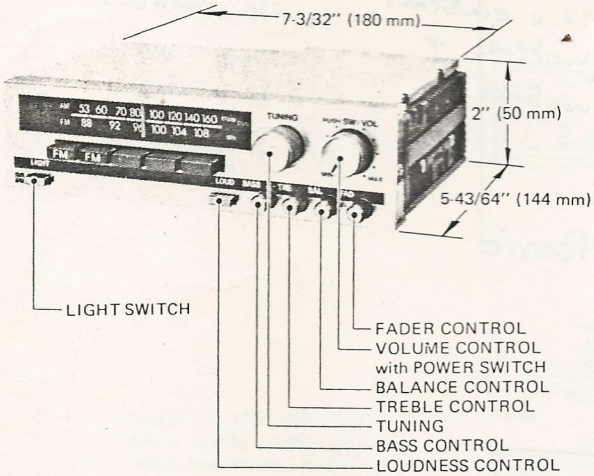

ANTENNA TRIMMER ALIGNMENT

The antenna trimmer alignment can be made without removing any parts.

To adjust the antenna trimmer C111, tune in a weak station near 1400 kHz.

Insert a small screwdriver through the hole as shown in below, and turn clockwise or counterclockwise for maximum output.

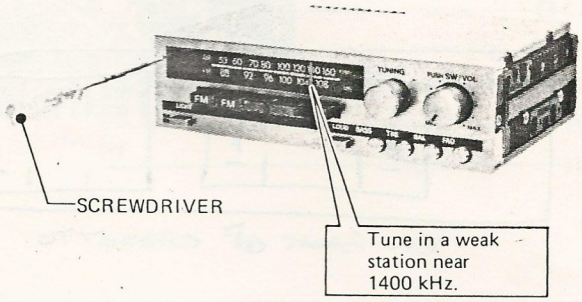

FUSE REPLACEMENT

If the car radio does not operate, check a fuse block of the car as shown in below.

(The car radio is not provided with a fuse).

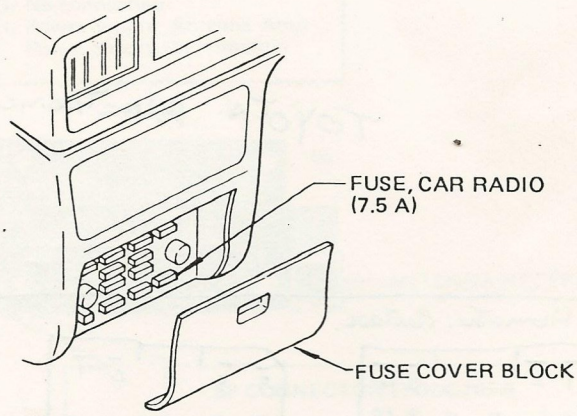

COMPOSITION

Panasonic/National Part No.	Toyota Part No.	Name	Pcs Set
CR-6736AT	86120-20420	Tuner Ass'y, Radio	1
	86211-20071	Side Bracket (R)	1
	86212-20081	Side Bracket (L)	1
EAS12P156SC	86160-20100	Front Speaker	2
EAS18D12SF	86160-20110	Rear Speaker (for Sedan/Hardtop)	2
EAS14P14SL	86160-20130	Rear Speaker (for Van)	2
EAS14P14SK	86160-20120	Rear Speaker (for Liftback)	2

ALIGNMENT INSTRUCTIONS

■ EQUIPMENT REQUIRED

- Signal Generator: AM: 450 ~ 1700 kHz, 400 Hz Mod. @30%
  FM: 10.7 MHz, 86 ~ 110 MHz, 400 Hz Mod. @30% and Stereo Signal Generator
- Sweep Generator: 450 kHz
  10.7 MHz
- Antenna Pad: Refer to Fig. 1 and Fig. 3
- Indicator: Output meter (AC voltmeter or VTVM)
  Oscilloscope
  Frequency counter
- Power Source: DC 13.2V (standard voltage for measurement)

AM (I-F & RF) ALIGNMENT

- Set Volume Control at maximum, and Bass & Treble Control in the center position.
- Set Band Selector Switch in the AM position.
- Set Balance Control in center.
- Connect the signal generator to the antenna receptacle through the antenna pad. (Fig. 1)
- Keep the signal generator output low enough to prevent overloading the circuit.

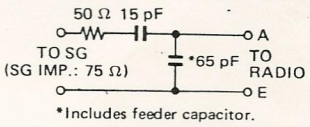

Fig. 1 Antenna Pad

	STEP	GENERATOR FREQUENCY	BAND SELECTOR SETTING	RADIO-DIAL SETTING	SIGNAL FEED POINT	INDICATOR CONNECTION	ADJUST	REMARKS
AM IF	❶	450 kHz [Unmodulated or 400 Hz Mod.]	AM	Point of non-interference. (on/about 600 kHz)	Through pad (Fig. 1) to antenna receptacle.	Between T.P.3 and ground or speaker terminals.	IFT101	Adjust for maximum.
AM RF	❷	510 kHz [400 Hz Mod.]	"	Low freq. end stop.	"	Output meter across speaker terminals.	L102 (OSC)	"
	❸	1640 kHz [400 Hz Mod.]	"	High freq. end stop.	"	"	C105 (OSC)	"
	❹ ❺	1400 kHz [400 Hz Mod.]	"	Tune to signal.	"	"	C103 (RF) C111 (ANT)	"

- When radio is installed in car, antenna fully extended, tune in a weak station near 1400 kHz and adjust C111 for maximum output.
- Refer to ANTENNA TRIMMER ALIGNMENT, page 1.
- Repeat steps two or three times.

FM (I-F & RF) ALIGNMENT

● FM I-F ALIGNMENT USING FM SIGNAL GENERATOR AND SWEEP GENERATOR

- Volume, Bass, Treble and Balance Control may be left in any position.
- Set Band Selector Switch in the FM position.
- Connect the signal generator to the antenna receptacle through the antenna pad. (Fig. 3)
- Keep the signal generator output low enough to prevent overloading the circuit.

	STEP	GENERATOR FREQUENCY	RADIO-DIAL SETTING	SIGNAL FEED POINT	INDICATOR CONNECTION	ADJUST	REMARKS
FM IF	❻	10.7 MHz	Point of non-interference.	Through pad (Fig. 3) to antenna receptacle.	Vert. amp of scope to T.P.2, low side to ground.	IFT51	Adjust for maximum amplitude and proper linearity between ±100 kHz markers.
	❼	"	"	"	Vert. amp of scope to T.P.1, low side to ground.	IFT151	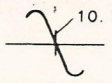 Fig. 2

- Repeat steps, two or three times.

WIRING DIAGRAM

TOYOTA PART NO. 86120-20420
MODEL CR-6736AT

ICs & TRANSISTOR

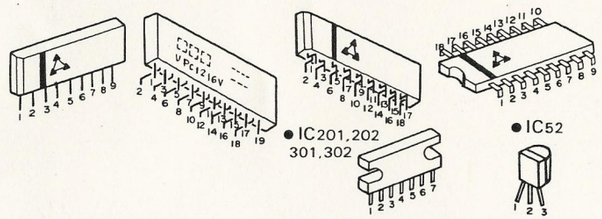

DIN701 (J)
1. Lch Input
2. Power Supply, Car Stereo
3. Ground
4. Power Supply, Radio
5. Power Supply
6. Rch Input
7. Power Supply, Illumination

TODC702 (P)
A. Rear-Right Speaker (+)
B. Rear-Right Speaker (–)
C. No Connection
D. Rear-Left Speaker (+)
E. Rear-Left Speaker (–)

TODC701(P)
A. Front-Right Speaker (+)
B. Front-Right Speaker (–)
C. Front-Left Speaker (+)
D. Front-Left Speaker (–)
E. Ground
F. Power Supply
G. No Connection
H. Power Supply, Antenna AMP
I. Power Supply, Illumination

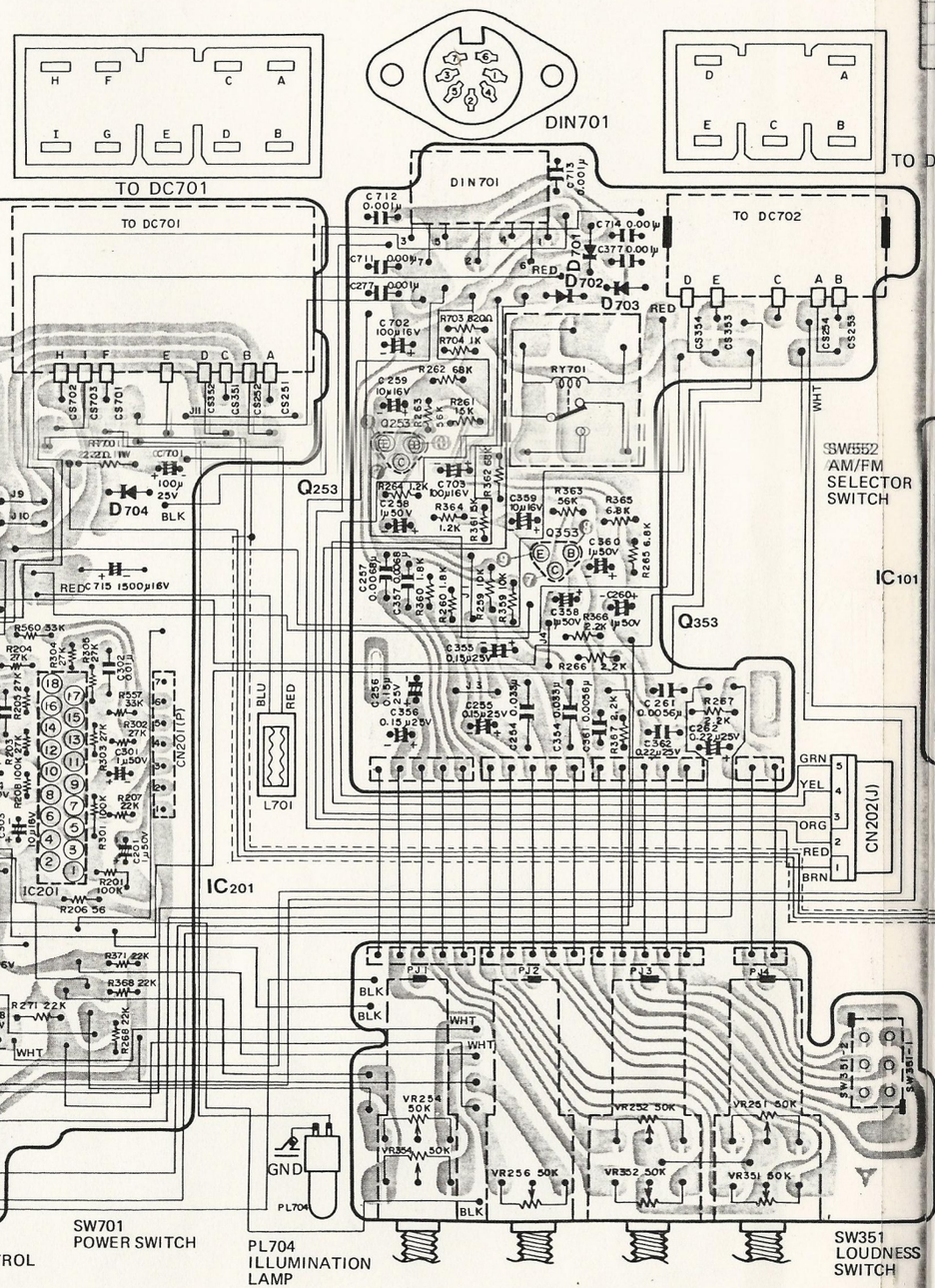

	TR		IC51		IC101		IC501		IC551		IC151		IC52		IC201,202 301,302
		PIN NO. VOLTAGE		PIN NO. VOLTAGE		PIN NO. VOLTAGE		PIN NO. VOLTAGE		PIN NO. VOLTAGE		PIN NO. VOLTAGE		PIN NO. VOLTAGE	
1	7.2V	1	7.6V	3	13.1V	12	1.9V	5	3.8V	18	0V	12	8.2V	6	2.5V	1	3.0V
2	3.2V	2	3.6V	1	2.8V	13	1.2V	6	2.9V	1	4.0V	13	7.8V	7	3.2V	2	3.1V
3	2.5V	3	7.6V	2	2.1V	14	5.8V	7	2.8V	2	3.3V	14	2.8V	8	0V	3	3.0V
4	9.7V	4	0.7V	3	0.1V	15	0V	8	2.9V	3	3.3V	15	2.2V	9	11.6V	4	0V
5	2.3V	5	0V	4	7.6V	16	2.9V	9	4.7V	4	3.7V	16	2.2V	10	1.6V	5	6.3V
6	1.7V	6	2.1V	5	1.3V	17	1.2V	10	9.7V	5	3.7V	17	1.6V	11	0.8V	6	6.0V
7	4.6V	7	1.5V	6	2.0V	18	5.8V	11	4.7V	6	4.8V	18	0V	12	1.6V	7	13.1V
8	1.1V	8	6.2V	7	7.9V	19	7.9V	12	4.0V		IC551			13	2.5V		
9	0.4V	9	4.9V	8	7.6V		IC151	13	4.7V	7	3.7V	1	1.6V	14	1.6V		
			IC52	9	0V	1	3.8V	14	4.0V	8	3.8V	2	10.4V	15	1.8V		
		1	7.7V	10	0V	2	3.8V	15	5.0V	9	2.6V	3	2.3V	16	1.6V		
		2	0V	11	3.4V	3	3.8V	16	3.9V	10	9.2V	4	2.5V	17	0.3V		
						4	0V	17	3.7V	11	0.1V	5	1.8V	18	0V		

IC201	
1	3.2V
2	3.2V
3	2.7V
4	13.1V
5	7.8V
6	7.2V
7	2.7V
8	2.4V
9	0.7V
10	2.5V
11	2.5V
12	2.0V
13	2.5V
14	2.5V
15	5.0V
16	5.0V
17	4.9V
18	0V

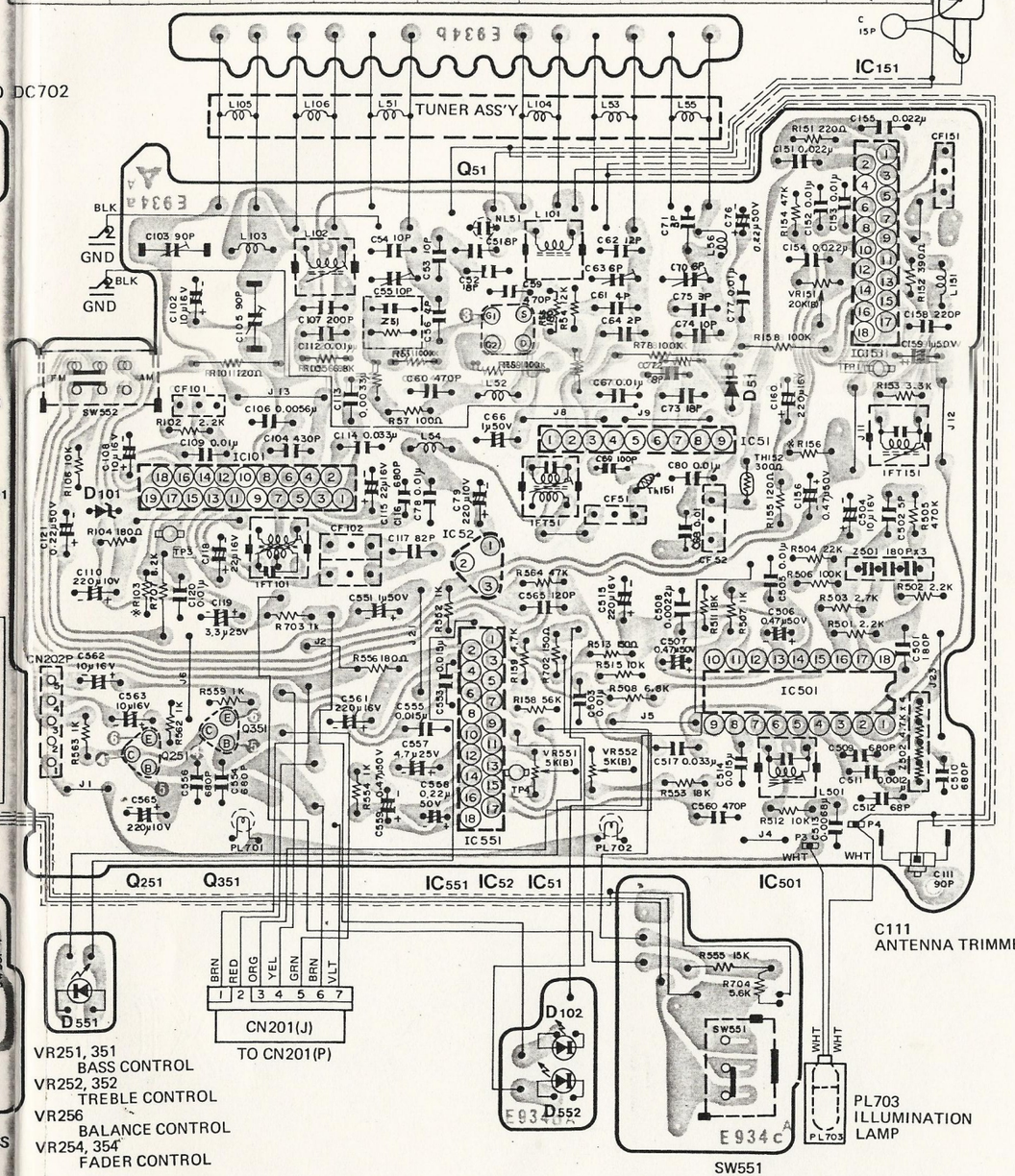

WIRE COLOR CODE:

RED	Red
BLU	Blue
BLK	Black
WHT	White
BRN	Brown
YEL	Yellow
VLT	Violet
GRN	Green
ORG	Orange
GRY	Gray

AM/FM/FM MPX CAR RADIO

• FM RF ALIGNMENT

- Set Volume Control at maximum, and Bass & Treble Control in the center position.
- Set Band Selector Switch in the FM position.
- Set Balance may be left in any position.
- Connect the signal generator to the antenna receptacle through the antenna pad. (Fig. 3)
- Keep the signal generator output low enough to prevent overloading the circuits.

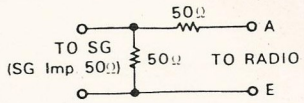

Fig. 3 Antenna Pad

	STEP	GENERATOR FREQUENCY	RADIO-DIAL SETTING	SIGNAL FEED POINT	INDICATOR CONNECTION	ADJUST	REMARKS
FM	❽	87.0 MHz [400 Hz Mod.]	Low freq. end stop.	Through pad (Fig. 3) to antenna receptacle.	Output meter across speaker terminals.	C70 (OSC)	Adjust for maximum.
RF	❾	98 MHz [400 Hz Mod.]	Tune to signal	"	"	C63 (RF)	"
	❿	98 MHz [400 Hz Mod.]	Tune to signal	"	"	C55 (ANT)	"

- Repeat steps, two or three times.

MULTIPLEX ALIGNMENT USING FM SIGNAL GENERATOR AND STEREO SIGNAL GENERATOR

- Set Volume Control at maximum, and Bass & Treble Control in the center position.
- Set Balance Control in center.
- Connect the signal generator to the antenna receptacle through the antenna pad. (Fig. 3)
- Keep the signal generator output low enough to prevent overloading the circuit.
- FM signal generator should be modulated by the stereo signal generator.

Modulation Level: 19 kHz, 10%
400 Hz, 30%

FM signal generator output level: 1 mV
FM signal generator frequency: 98 MHz

	STEP	MODULATION FREQUENCY	INDICATOR	ADJUST	REMARKS
FM	⓫	no signal input	Frequency counter to test T.P.4, low side to ground.	VR552	Adjust to 19 kHz ±30 Hz.
MPX	⓬	19 kHz, 400 Hz (Right Channel)	VTVM to left side terminals.	VR551	Adjust for minimum.
		19 kHz, 400 Hz (Left Channel)	VTVM to right speaker terminals.		Adjust for minimum.

- Repeat steps, two or three times.

FM NOISE RESIDUE ALIGNMENT

- Set Bass and Treble Control in the center position.
- Set Band Selector Switch in the FM position.
- Balance Control may be left in any position.
- Connect the signal generator to the antenna receptacle through the antenna pad. (Fig. 3)

Modulation Level: 19 kHz, 10%
FM Signal Generator Output Level: 1 mV

- Set Volume Control for 0.5W output power, and then decrease the signal generator output level to 0 dB.

	STEP	GENERATOR FREQUENCY	RADIO-DIAL SETTING	SIGNAL FEED POINT	INDICATOR CONNECTION	ADJUST	REMARKS
FM Noi.	⓭	98.0 MHz [400 Hz Mod.]	Tune to signal	Through pad (Fig. 3) to antenna receptacle	Output meter across speaker terminals.	VR151	Adjust to −20 dB down output.

Replacement Parts List
Model NO. CR-6736AT(TOYOTA PART NO. 86120-20420)

NOTES:
1. Be sure to make your orders of replacement parts according to this list.
2. Components identified by shaded area have special characteristics important for safety. When replacing any of these components, use only manufacturer's specified parts.
3. Next to the Ref. No. in the parts list is a location key, to show the general location of the parts shown in the exploded drawing, as in a road map.

Ref. No.	Part No.	Part Name & Description	Pcs Set	Remarks
		MISCELLANEOUS		
PL701, 702 (3-A) (3-B)	YEAL01078	Pilot Lamp	2	
PL703 (2-A)	YEAL31010WL	Pilot Lamp	1	
PL704 (1-C)	YEAL25001L	Pilot Lamp	1	
NL51 (3-B)	YEAL02003	None Tube	1	
CN201P (2-B)	EMCS0750M	7P Connector, Plug	1	
CN201J (3-B)	EMCM0714A51	7P Connector, Jack	1	
CN202P (3-B)	EMCS0550M	5P Connector, Plug	1	
CN202J (1-C)	EMCM0514A51	5P Connector, Jack	1	
TOCN701 (2-C)	EMCP0926AT	9P Connector	1	
TOCN702 (2-C)	EMCP0522AT	5P Connector	1	
DIN701 (1-C)	YEAE01286	DIN Connector	1	
ANT (1-B)	YEAA10019A	Antenna Receptacle	1	
M1 (1-A)	YEFA01445B	Chassis	1	
M2 (3-A)	YEFA03425B	Upper Cover	1	
M3 (3-B)	YEFA08085A	Rear Plate	1	
M4 (3-C)	YEFF01250A	Heat Sink	1	
M5 (1-B)	YEFF01252A	Heat Sink	1	
M6 (1-A)	YEFC02970	Escutcheon Ass'y	1	
M7 (1-C)	YEFX0211023	Mounting Bracket	1	
M8 (2-B)	YEFX046398A	Lever	1	
M9 (1-C)	YEFX999266	Heat Pipe	1	
M10 (3-A)	YEFW06608	Shaft	1	
M11 (2-B)	YEFE17165A	Knob, Loudness Selector	1	
M12 (2-B)	YEFX009092	Mounting Bracket	1	
M13 (2-B)	YEFX0211022	Mounting Bracket	1	

Ref. No.	Part No.	Part Name & Description	Pcs Set	Remarks
M14 (2-B)	YEFH01217B	Dial Pointer	1	
M15 (3-A) (1-A)	YEFR04084A	Illumination Cap	3	
M16 (1-A)	YEFS02058	Felt	1	
M17 (1-A)	YEFE02049	Knob, Volume Control	1	
M18 (1-A)	YEFE03016	Knob, Tuning	1	
M19 (3-B)	YEFS04111	Cushion Rubber	1	
M20 (1-A)	YEFE10355	Button, Control	4	
M21	YEFA13346A	Case	1	
M22 (3-A)	YEFJ08601	Dial Plate	1	
M23 (1-A)	YEFK04310	Pilot Lamp Holder	1	
M24 (2-A)	YEFJ10292A	Back Plate Ass'y	1	
M25 (1-C)	YEAE03073	DIN Short Plug	1	
M26	YEFX0211160	Mounting Bracket	1	
M27 (1-B)	YEFR04134	Illumination Cap	1	
M28	YEFS04159	Cushion Rubber	1	
M29	YEFX0211044	Mounting Bracket	1	
M30 (2-C)	YEFX0211026A	Mounting Bracket, IC	1	
M31 (1-A)	YEJN01057	Nut, Hexagon	6	
M32	YEJW04015	Washer, Plastics	2	
M33	YEJW04016	Washer, Plastics	1	
M34	XTB3 + 6FFXS	⊕ Screw, Taptite 3mmø x 6mm	8	
M35	XTB3 + 8FFXS	⊕ Screw, Taptite 3mmø x 8mm	4	
M36	XSB3 + 6FXS	⊕ Screw, Bind 3mmø x 6mm	7	
M37	XSB3 + 4FXS	⊕ Screw, Bind 3mmø x 4mm	2	
M38	XYN3 + F6FXS	⊕ Screw w/Washer, 3mmø x 6mm	2	
M39	YEJT03013	⊕ Screw, Taptite	4	

SCHEMATIC DIAGRAM

TOYOTA PART NO. 86120-20420
MODEL CR-6736AT

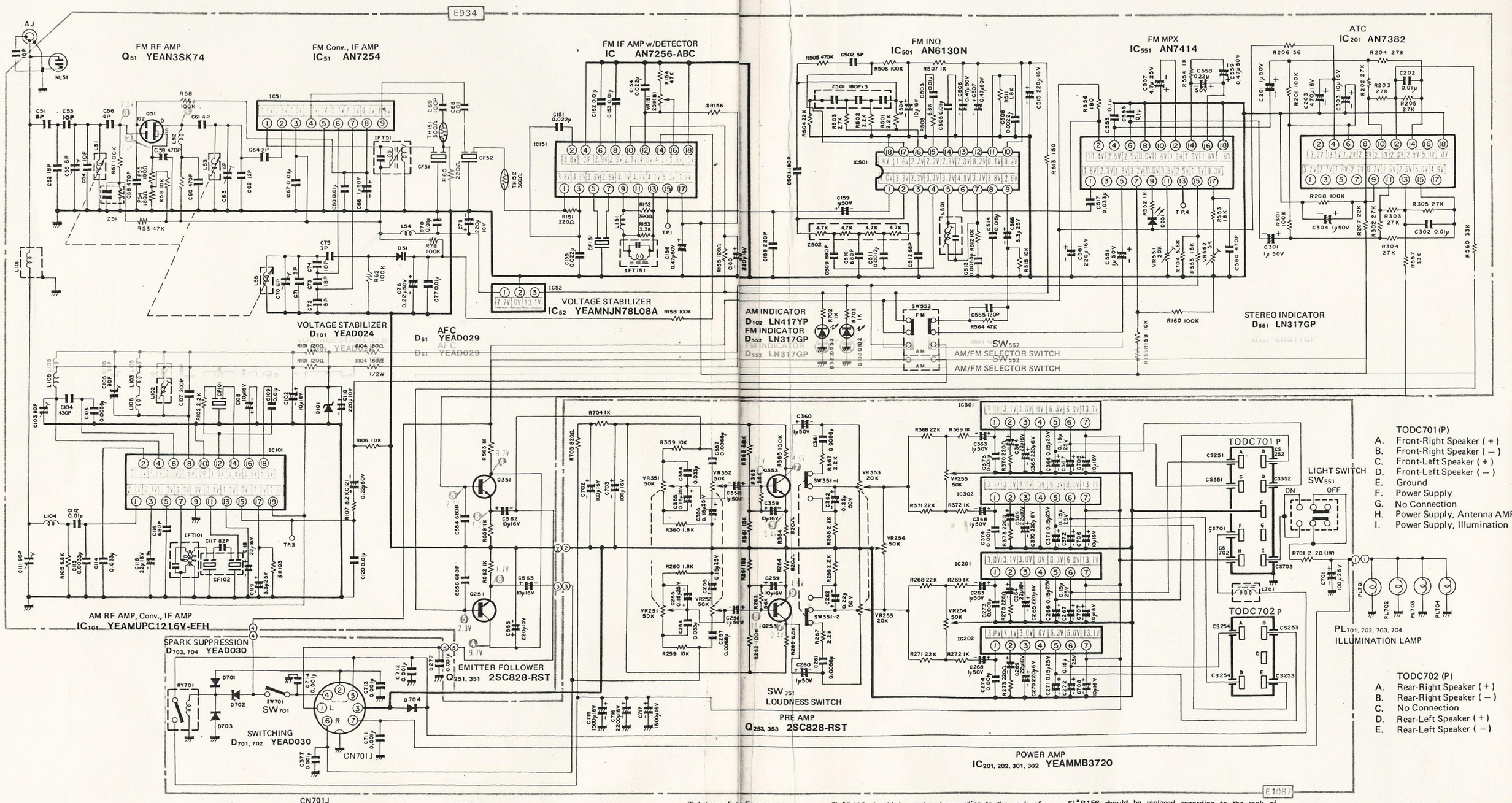

TODC701 (P)
A. Front-Right Speaker (+)
B. Front-Right Speaker (−)
C. Front-Left Speaker (+)
D. Front-Left Speaker (−)
E. Ground
F. Power Supply
G. No Connection
H. Power Supply, Antenna AMP
I. Power Supply, Illumination

TODC702 (P)
A. Rear-Right Speaker (+)
B. Rear-Right Speaker (−)
C. No Connection
D. Rear-Left Speaker (+)
E. Rear-Left Speaker (−)

CN701J
1. Lch Tape Input
2. Power Supply, Car Stereo
3. Ground
4. Power Supply, Radio
5. Power Supply
6. Rch Tape Input
7. Power Supply, Illumination

NOTES:
1) Voltage measurements are in respect to ground with a digital voltmeter, with controls set for normal operation, 13.2 V DC, power supply.
2) Dial pointer set to the highest frequency (right end) during measurements.
3) Intermediate Frequency:
AM 450 kHz
FM 10.7 MHz
4) Frequency Range:
AM 530 kHz ~1605 kHz
FM 88 MHz ~108 MHz
5) *R103 should be replaced according to the rank of IC101 (Part No. YEAMUPC1216V) as below.

Rank	Resistor
E	82k OHM
F	56k OHM
H	39k OHM

6) *R156 should be replaced according to the rank of IC151 (Part No. AN7256) as below.

Rank	Resistor
A	15k OHM
B	27k OHM
C	Open(cut)

Exact value determoned by production process. This schematic diagram is the latest at the time of printing and subject to change without notice.
Replace same value as original parts.

ICs AND TRANSISTORS

RF & IF BLOCK

Ref. No.	Part No.	Part Name & Description	Pcs Set	Remarks
IC51	AN7254	FM IF, Conv.	1	
IC52	YEAMNJM78L08	Voltage Regulator	1	
IC101	YEAMUPC1216V	AM RF, IF, Detector	1	
IC151	AN7256	FM IF Amp	1	
IC501	AN6130N	FM PNL	1	
IC551	AN7414	MPX	1	
Q51	YEAN3SK74LM	FM RF Amp	1	
Q251, 351	2SC828	Emitter Follower	2	

AUDIO BLOCK

Ref. No.	Part No.	Part Name & Description	Pcs Set	Remarks
IC201	AN7382	ATC	1	
IC201, 202, 301 302	YEAMMB3730	Power Smp	4	
Q253, 353	2SC828	Pre Amp	2	

DIODES

RF & IF BLOCK

Ref. No.	Part No.	Part Name & Description	Pcs Set	Remarks
D51	YEAD1S2687T7	AFC	1	
D101	YEAD024	Voltage Stabilizer	1	
D102	LN417YP	AM INDICATOR	1	
D551, 552	LN317GP	FM, ST INDICATOR	2	

AUDIO BLOCK

Ref. No.	Part No.	Part Name & Description	Pcs Set	Remarks
D701, 702, 703 704	YEAD030	Voltage Stabilizer	4	

CAPACITORS

RF & IF BLOCK

Ref. No.	Part No.	Part Name & Description	Pcs Set	Remarks
C51	YECCD1H080DM	8 PF 50WV ±0.5 PF Ceramic	1	
C52	YECCD1H180KM	18 PF 50WV ±10% Ceramic	1	
C53	YECCD1H220JS	22 PF 50WV ±5% Ceramic	1	
C54	YECCD1H100DS	10 PF 50WV ±0.5 PF Ceramic	1	
C56	YECCD1H040DM	4 PF 50WV ±0.5 PF Ceramic	1	
C58	YECKD05471K	470 PF 50WV ±10% Ceramic	1	
C59	YECKD1H471KB	470 PF 50WV ±10% Ceramic	1	
C60	YECKD05471K	470 PF 50WV ±10% Ceramic	1	

Ref. No.	Part No.	Part Name & Description				Pcs Set	Remarks
C61	YECCD1H040DM	4 PF	50WV	±0.5 PF	Ceramic	1	
C62	YECCD1H150JS	15 PF	50WV	±5%	Ceramic	1	
C64	YECCD1H020CM	2 PF	50WV	±0.25 PF	Ceramic	1	
C66	ECEA1HS010	1 MFD	50WV		Electrolytic	1	
C67	YECKD05103Z	0.01 MFD	50WV	+80, −20%	Ceramic	1	
C68	YECCD1H180KM	18 PF	50WV	±10%	Ceramic	1	
C69	YECCD1H180KM	18 PF	50WV	±10%	Ceramic	1	
C71	YECCD1H030CT	3 PF	50WV	±0.25 PF	Ceramic	1	
C72	YECCD1H080DM	8 PF	50WV	±0.5 PF	Ceramic	1	
C73	YECCD1H180JM	18 PF	50WV	±5%	Ceramic	1	
C74	YECCD1H100KT	10 PF	50WV	±10%	Ceramic	1	
C75	YECCD1H030DT	3 PF	50WV	±0.5 PF	Ceramic	1	
C76	ECEA50MR22	0.22 MFD	50WV		Electrolytic	1	
C77	YECKD05103Z	0.01 MFD	50WV	+80, −20%	Ceramic	1	
C78	YECKD05103Z	0.01 MFD	50WV	+80, −20%	Ceramic	1	
C79	ECEA1AS221	220 MFD	10WV		Electrolytic	1	
C80	YECQX1H103M	0.01 MFD	50WV	±20%	Polyester	1	
C102	ECEA1CS100	10 MFD	16WV		Electrolytic	1	
C104	YECCD1H431JM	430 PF	50WV	±5%	Ceramic	1	
C106	YECQX1H562K	0.0056 MFD	50WV	±10%	Polyester	1	
C107	YECCD1H201JS	200 PF	50WV	±5%	Ceramic	1	
C108	ECEA1CS100	10 MFD	16WV		Electrolytic	1	
C109	YECQX1H103M	0.01 MFD	50WV	±20%	Polyester	1	
C110	ECEA1AS221	220 MFD	10WV		Electrolytic	1	
C112	YECQX1H103M	0.01 MFD	50WV	±20%	Polyester	1	
C113	YECQX1H332K	0.0033 MFD	50WV	±10%	Polyester	1	
C114	YECQX1H33M	0.033 MFD	50WV	±20%	Polyester	1	
C115	ECEA1CS220	22 MFD	16WV		Electrolytic	1	
C116	YECQP2A681J	680 PF	100WV	±5%	Polyester	1	
C117	YECCD1H820KM	82 PF	50WV	±10%	Ceramic	1	
C118	ECEA1CS220	22 MFD	16WV		Electrolytic	1	
C119	ECEA1ES3R3	3.3 MFD	25WV		Electrolytic	1	
C120	YECQX1H103M	0.01 MFD	50WV	±20%	Polyester	1	
C121	ECEA1HSR22	0.22 MFD	50WV		Electrolytic	1	

Ref. No.	Part No.	Part Name & Description				Pcs Set	Remarks
C151	YECQX1H223M	0.022 MFD	50WV	±20%	Polyester	1	
C152	YECQX1H103M	0.01 MFD	50WV	±20%	Polyester	1	
C153	YECQX1H103M	0.01 MFD	50WV	±20%	Polyester	1	
C154	YECQX1H223M	0.022 MFD	50WV	±20%	Polyester	1	
C155	YECQX1H223M	0.022 MFD	50WV	±20%	Polyester	1	
C156	ECEA50MR47	0.47 MFD	50WV		Electrolytic	1	
C158	YECCD1H221JM	220 PF	50WV	±5%	Ceramic	1	
C159	ECEA1HS010	1 MFD	50WV		Electrolytic	1	
C160	ECEA1CS221	220 MFD	16WV		Electrolytic	1	
C162	YECCD1H050DM	5 PF	50WV	±0.5 PF	Ceramic	1	
C501	YECCD1H181KM	180 PF	50WV	±10%	Ceramic	1	
C502	YECCD1H050DM	5 PF	50WV	±0.5 PF	Ceramic	1	
C503	YECQX1H103M	0.01 MFD	50WV	±20%	Polyester	1	
C504	ECEA1CS100	10 MFD	16WV		Electrolytic	1	
C505	YECQX1H103M	0.01 MFD	50WV	±20%	Polyester	1	
C506	ECEA50MR47	0.47 MFD	50WV		Electrolytic	1	
C507	ECEA50MR47	0.47 MFD	50WV		Electrolytic	1	
C508	YECQX1H222K	0.0022 MFD	50WV	±10%	Polyester	1	
C509	YECQP2A681J	680 PF	100WV	±5%	Polyester	1	
C510	YECQP2A681J	680 PF	100WV	±5%	Polyester	1	
C511	YECQX1H122K	0.0012 MFD	50WV	±10%	Polyester	1	
C512	YECCD1H680KM	68 PF	50WV	±10%	Ceramic	1	
C513	YECQX1H682M	0.0068 MFD	50WV	±20%	Polyester	1	
C514	YECQX1H153M	0.015 MFD	50WV	±20%	Polyester	1	
C515	ECEA1CS221	220 MFD	16WV		Electrolytic	1	
C517	YECQX1H333M	0.033 MFD	50WV	±20%	Polyester	1	
C551	ECEA1HS010	1 MFD	50WV		Electrolytic	1	
C553	YECQX1H153M	0.015 MFD	50WV	±20%	Polyester	1	
C554	YECQP2A681J	680 PF	100WV	±5%	Polyester	1	
C555	YECQX1H153M	0.015 MFD	50WV	±20%	Polyester	1	
C556	YECQP2A681J	680 MFD	100WV	±5%	Polyester	1	
C557	ECEA1ES4R7	4.7 MFD	25WV		Electrolytic	1	
C558	ECEA50MR22	0.22 MFD	50WV		Electrolytic	1	
C559	ECEA50MR47	0.47 MFD	50WV		Electrolytic	1	

Ref. No.	Part No.	Part Name & Description	Pcs Set	Remarks
C560	YECQP2A471J	470 PF 100WV ±5% Polyester	1	
C561	ECEA1CS221	220 MFD 16WV Electrolytic	1	
C562	ECEA1CS100	10 MFD 16WV Electrolytic	1	
C563	ECEA1CS100	10 MFD 16WV Electrolytic	1	
C565	ECEA1AS221	220 MFD 10WV Electrolytic	1	
C565	YECCD1H121KM	120 PF 50WV ±10% Ceramic	1	
C566	ECEA1ES3R3	3.3 MFD 25WV Electrolytic	1	
		AUDIO BLOCK		
C201	ECEA1HS010	1 MFD 50WV Electrolytic	1	
C202	YECQX1H103M	0.01 MFD 50WV Polyester	1	
C203	ECEA1CS471	470 MFD 16WV Electrolytic	1	
C254	YECQX1H333M	0.033 MFD 50WV ±20% Polyester	1	
C255	YECAE1ER15M	0.15 MFD 25WV Electrolytic	1	
C256	YECAE1ER15M	0.15 MFD 25WV Electrolytic	1	
C257	YECQX1H682M	0.0068 MFD 50WV ±20% Polyester	1	
C258	ECEA1HS010	1 MFD 50WV Electrolytic	1	
C259	ECEA1CS100	10 MFD 16WV Electrolytic	1	
C260	ECEA1HS010	1 MFD 50WV Electrolytic	1	
C261	YECQX1H562K	0.0056 MFD 50WV ±10% Polyester	1	
C262	ECEA50MR22	0.22 MFD 50WV Electrolytic	1	
C263	ECEA1HS010	1 MFD 50WV Electrolytic	1	
C264	ECEA1CS220	22 MFD 16WV Electrolytic	1	
C265	ECEA0JS221	220 MFD 6WV Electrolytic	1	

Ref. No.	Part No.	Part Name & Description	Pcs Set	Remarks
C266	YECAE1ER15M0	0.15 MFD 25WV Electrolytic	1	
C267	YECAE1ER15M0	0.15 MFD 25WV Electrolytic	1	
C268	ECEA1HS010	1 MFD 50WV Electrolytic	1	
C269	ECEA1CS220	22 MFD 16WV Electrolytic	1	
C270	ECEA0JS221	220 MFD 6WV Electrolytic	1	
C271	YECAE1ER15M0	0.15 MFD 25WV Electrolytic	1	
C272	YECAE1ER15M0	0.15 MFD 25WV Electrolytic	1	
C273	YECQX1H102K	0.001 MFD 50WV ±10% Polyester	1	
C274	YECQX1H102K	0.001 MFD 50WV ±10% Polyester	1	
C277	YECQX1H102K	0.001 MFD 50WV ±10% Polyester	1	
C301	ECEA1HS010	1 MFD 50WV Electrolytic	1	
C302	YECQX1H103M	0.01 MFD 50WV ±20% Polyester	1	
C303	ECEA1CS100	10 MFD 16WV Electrolytic	1	
C304	ECEA1HS010	1 MFD 50WV Electrolytic	1	
C354	YECQX1H103M	0.033 MFD 50WV ±20% Polyester	1	
C355	YECAE1ER15M0	0.15 MFD 25WV Electrolytic	1	
C356	YECAE1ER15M0	0.15 MFD 25WV Electrolytic	1	
C357	YECQX1H682M	0.0068 MFD 50WV ±20% Polyester	1	
C358	ECEA1HS010	1 MFD 50WV Electrolytic	1	
C359	ECEA1CS100	10 MFD 16WV Electrolytic	1	
C360	ECEA1HS010	1 MFD 50WV Electrolytic	1	
C361	YECQX1H562K	0.0056 MFD 50WV ±10% Polyester	1	
C362	ECEA50MR22	0.22 MFD 50WV Electrolytic	1	
C363	ECEA1HS010	1 MFD 50WV Electrolytic	1	
C364	ECEA1CS220	22 MFD 16WV Electrolytic	1	
C365	ECEA0JS221	220 MFD 6WV Electrolytic	1	
C366	YECAE1ER15M0	0.15 MFD 25WV Electrolytic	1	
C367	YECAE1ER15M0	0.15 MFD 25WV Electrolytic	1	
C368	ECEA1HS010	1 MFD 50WV Electrolytic	1	
C369	ECEA1CS220	22 MFD 16WV Electrolytic	1	
C370	ECEA0JS221	220 MFD 6WV Electrolytic	1	
C371	YECAE1ER15M0	0.15 MFD 25WV Electrolytic	1	
C372	YECAE1ER15M0	0.15 MFD 25WV Electrolytic	1	
C373	YECQX1H102K	0.001 MFD 50WV ±10% Polyester	1	

Ref. No.	Part No.	Part Name & Description	Pcs Set	Remarks
C374	YECQX1H102K	0.001 MFD 50WV ±10% Polyester	1	
C377	YECQX1H102K	0.001 MFD 50WV ±10% Polyester	1	
C701	ECEA1ES101	100 MFD 25WV Electrolytic	1	
C702	ECEA1CS101	100 MFD 16WV Electrolytic	1	
C703	ECEA1CS101	100 MFD 16WV Electrolytic	1	
C705	ECEA1CS100	10 MFD 16WV Electrolytic	1	
C706	ECEA1CS100	10 MFD 16WV Electrolytic	1	
C707	ECEA1CS100	10 MFD 16WV Electrolytic	1	
C708	ECEA1CS100	10 MFD 16WV Electrolytic	1	
C711	YECQX1H102K	0.001 MFD 50WV ±10% Polyester	1	
C712	YECQX1H102K	0.001 MFD 50WV ±10% Polyester	1	
C713	YECQX1H102K	0.001 MFD 50WV ±10% Polyester	1	
C714	YECQX1H102K	0.001 MFD 50WV ±10% Polyester	1	
C715	ECEA1CS152SZ	1500 MFD 16WV Electrolytic	1	
C716	ECEA1CS222SZ	2200 MFD 16WV Electrolytic	1	
C717	ECEA1CS152SZ	1500 MFD 16WV Electrolytic	1	

MAIN UNIT

C50	YECCD1H150KM	15 PF 50WV ±10% Ceramic	1	

Ref. No.	Part No.	Part Name & Description	Pcs Set	Remarks

RESISTORS

RF & IF BLOCK

R51	ERD25VJ104	100k OHM 1/4W ±5% Carbon	1	
R53	ERD25VJ473	47k OHM 1/4W ±5% Carbon	1	
R54	ERD25VJ181	180 OHM 1/4W ±5% Carbon	1	
R55	ERD25VJ181	180 OHM 1/4W ±5% Carbon	1	
R56	ERD25VJ102	1k OHM 1/4W ±5% Carbon	1	
R57	ERD25VJ101	100 OHM 1/4W ±5% Carbon	1	
R58	ERD25TJ104	100k OHM 1/4W ±5% Carbon	1	
R60	ERD25VJ221	220 OHM 1/4W ±5% Carbon	1	
R61	ERD25VJ331	330 OHM 1/4W ±5% Carbon	1	
R62	ERD25VJ104	100k OHM 1/4W ±5% Carbon	1	
R101	ERD25TJ121	120 OHM 1/4W ±5% Carbon	1	
R102	ERD25VJ222	2.2k OHM 1/4W ±5% Carbon	1	
R103	ERD25VJ823	82k OHM 1/4W ±5% Carbon	1	
R104	ERD12FJ181	180 OHM 1/2W ±5% Carbon	1	
R105	ERD25VJ682	6.8 OHM 1/4W ±5% Carbon	1	
R106	ERD25VJ103	10k OHM 1/4W ±5% Carbon	1	
R107	ERD25VJ822	8.2k OHM 1/4W ±5% Carbon	1	
R151	ERD25VJ221	220 OHM 1/4W ±5% Carbon	1	
R152	ERD25VJ332	390 OHM 1/4W ±5% Carbon	1	
R153	ERD25VJ332	3.3k OHM 1/4W ±5% Carbon	1	
R154	ERD25VJ473	47k OHM 1/4W ±5% Carbon	1	
R155	ERD25VJ121	120 OHM 1/4W ±5% Carbon	1	
R156	ERD25VJ153	15k OHM 1/4W ±5% Carbon	1	
R158	ERD25TJ104	100k OHM 1/4W ±5% Carbon	1	
R159	ERD25VJ103	10k OHM 1/4W ±5% Carbon	1	
R160	ERD25VJ563	56k OHM 1/4W ±5% Carbon	1	
R501	ERD25VJ222	2.2k OHM 1/4W ±5% Carbon	1	
R502	ERD25VJ222	2.2k OHM 1/4W ±5% Carbon	1	
R503	ERD25VJ272	2.7k OHM 1/4W ±5% Carbon	1	
R504	ERD25VJ223	22k OHM 1/4W ±5% Carbon	1	

PARTS LOCATION

- Reference numbers, in ( ), are listed in the Replacement Parts List, starting on page 7.
- For other parts location, see the EXPLODED VIEW, on page 8.

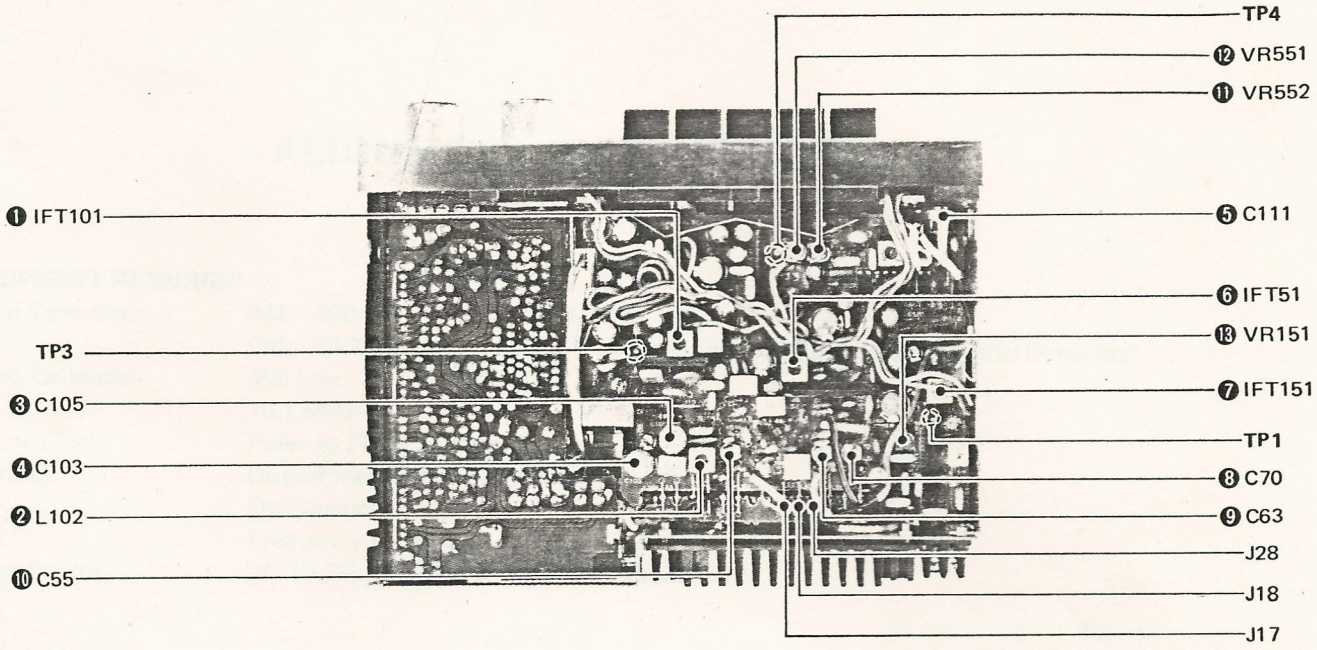

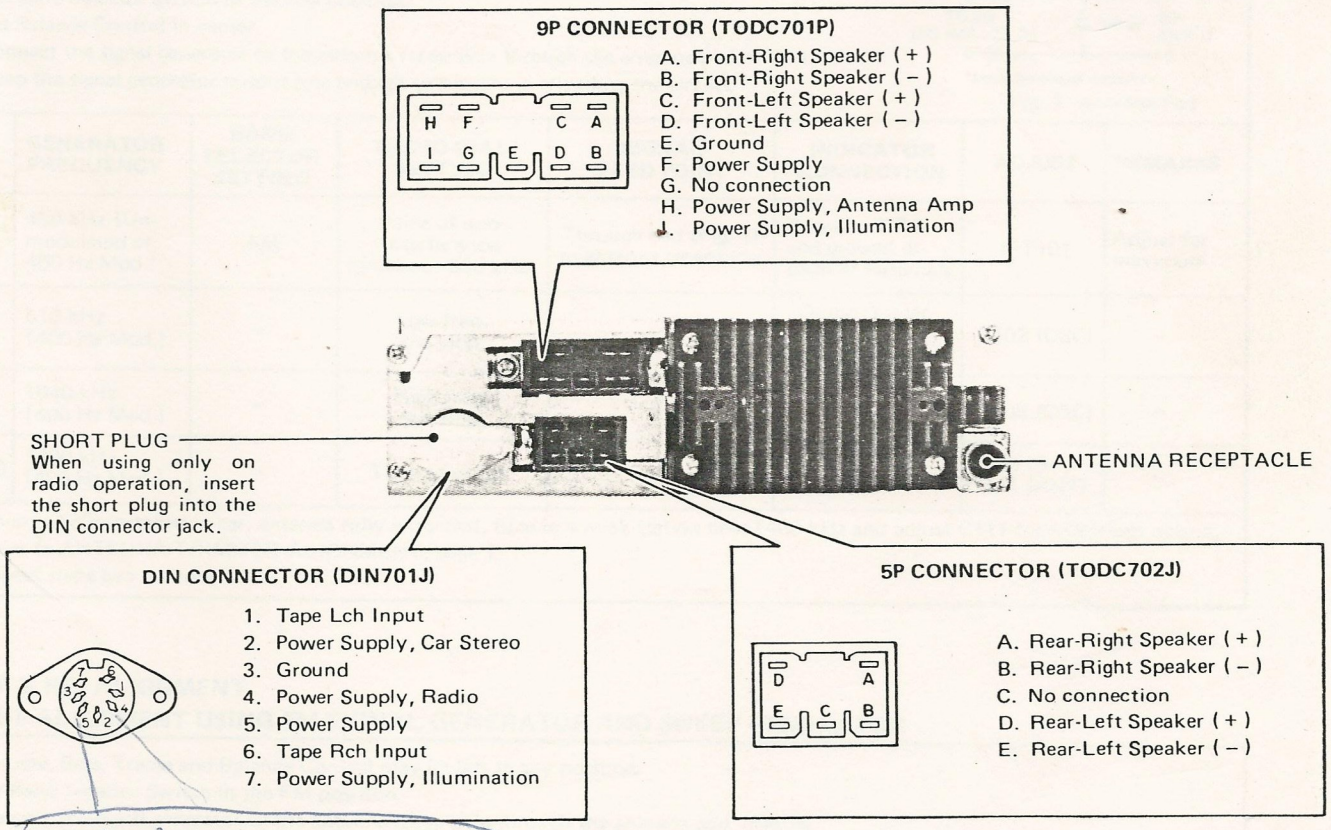

SHORT PIN 4 AND 5
TO USE WITHOUT TAPE DECK

CR-KS 223A-
86120-22450.

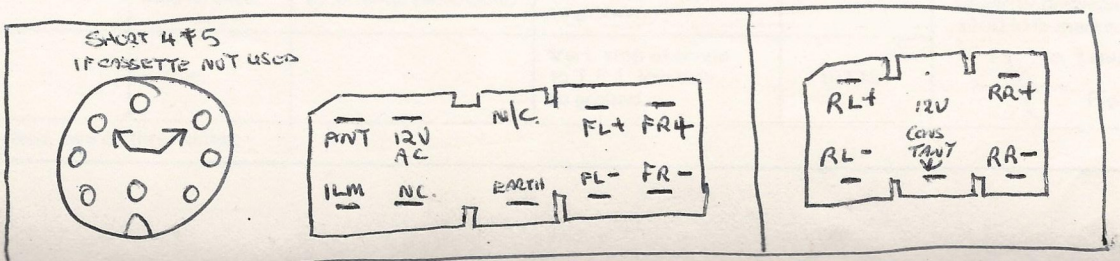

SUB WOFFER. AMP.

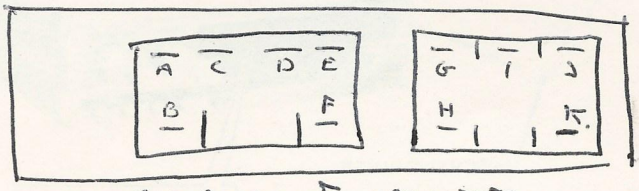

ON BACK OF CASSETTE.

A LEFT REAR SPEAKER −
B LEFT " " +
C NOT USED.
D SWITCH ON SENCING
E RIGHT REAR −
F RIGHT REAR +.

G WOOFER +
H WOOFER − G + J COMMON
I 12 V CONSTANT. H + K COMMON.
J WOFFER +
K WOFFER −

TOYOTA. ELECTRONIC SEARCH. RADIO

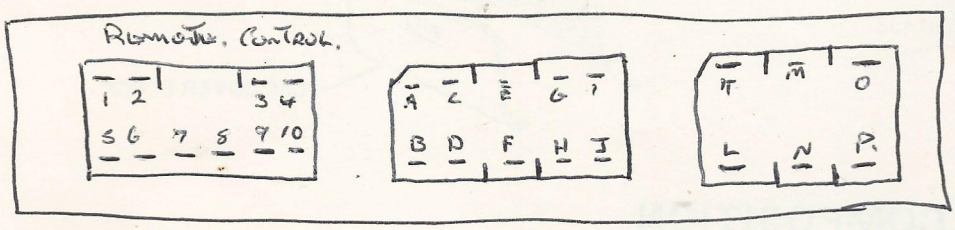

A POWER ANT.
B DAIL LIGHT.
C ?
D 12V ACC OUT.
E NOT USED.
F EARTH
G LEFT FRONT +
H LEFT FRONT −
I RIGHT FRONT +
J RIGHT FRONT −

K LEFT REAR +
L LEFT REAR −
M NOT USED.
N 12V CONSTANT.
O RIGHT REAR +.
P. RIGHT REAR −

REMOTE CONTROL SOCKET

1 ?
2 DAIL LIGHT
3 ?
4 ?
5 − 5V OUT CONSTANT
6 − 12V ACC IN
7 ?
8 ?
9 ?
10 − 10 VOLTS OUT. SWITCHED.

12V SUPPLY TO.
PINS 4+6 SHORT PINS
4+5 ON CASSETTE SOCKET

EXPLODED VIEW
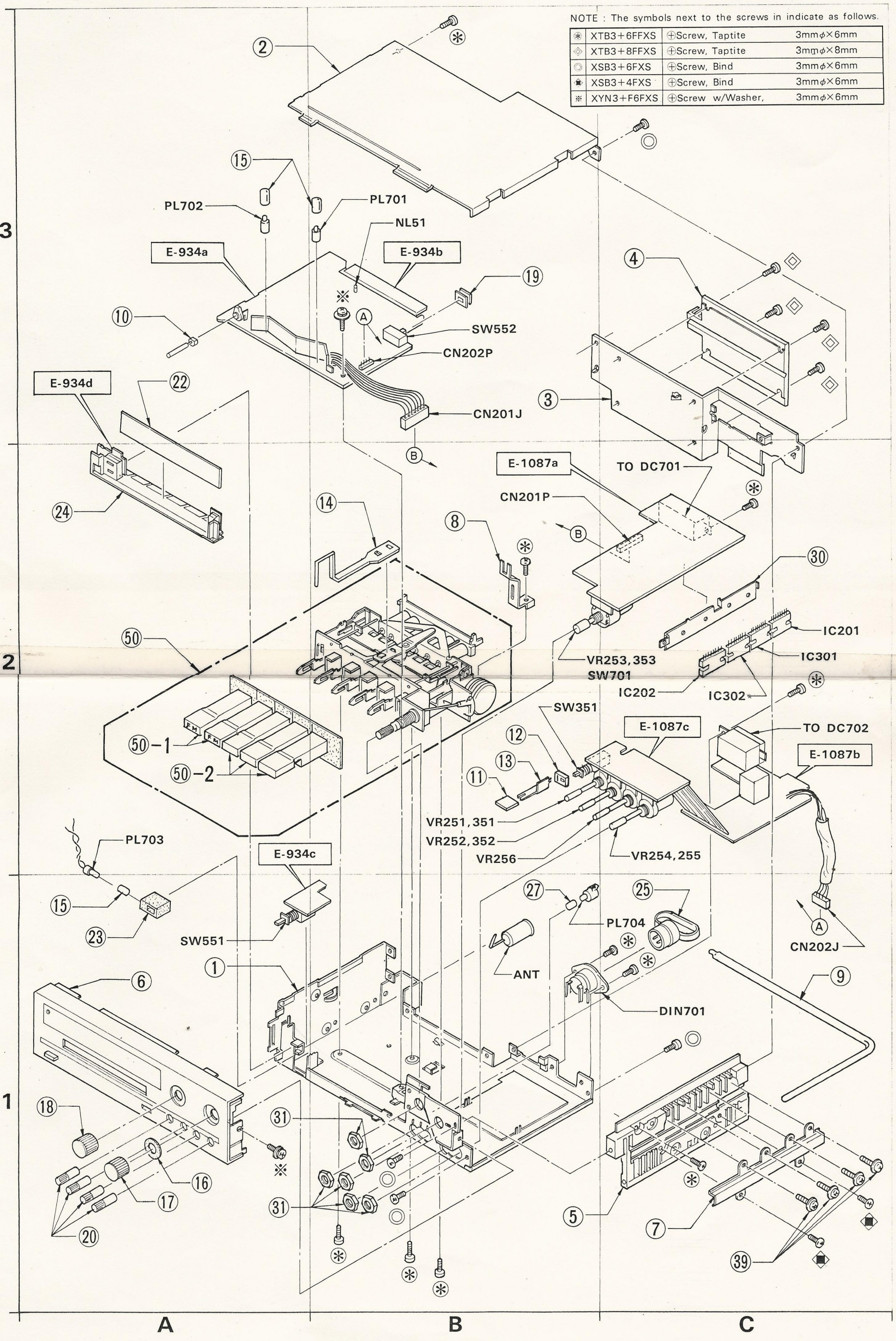
■ Numbers in ○ are indicated REF. NO. in the REPLACEMENT PARTS LIST.